1 1968-75 "Y" FOLDING TOP DETAILS (V14-15)

2 1968-75 "Y" FOLDING TOP LID DETAILS (V14-2)

3 1968-76 "Y" INTERIOR TRIM (V14-14)

Make: CHEVROLET, Year: 68, Model: Corvette

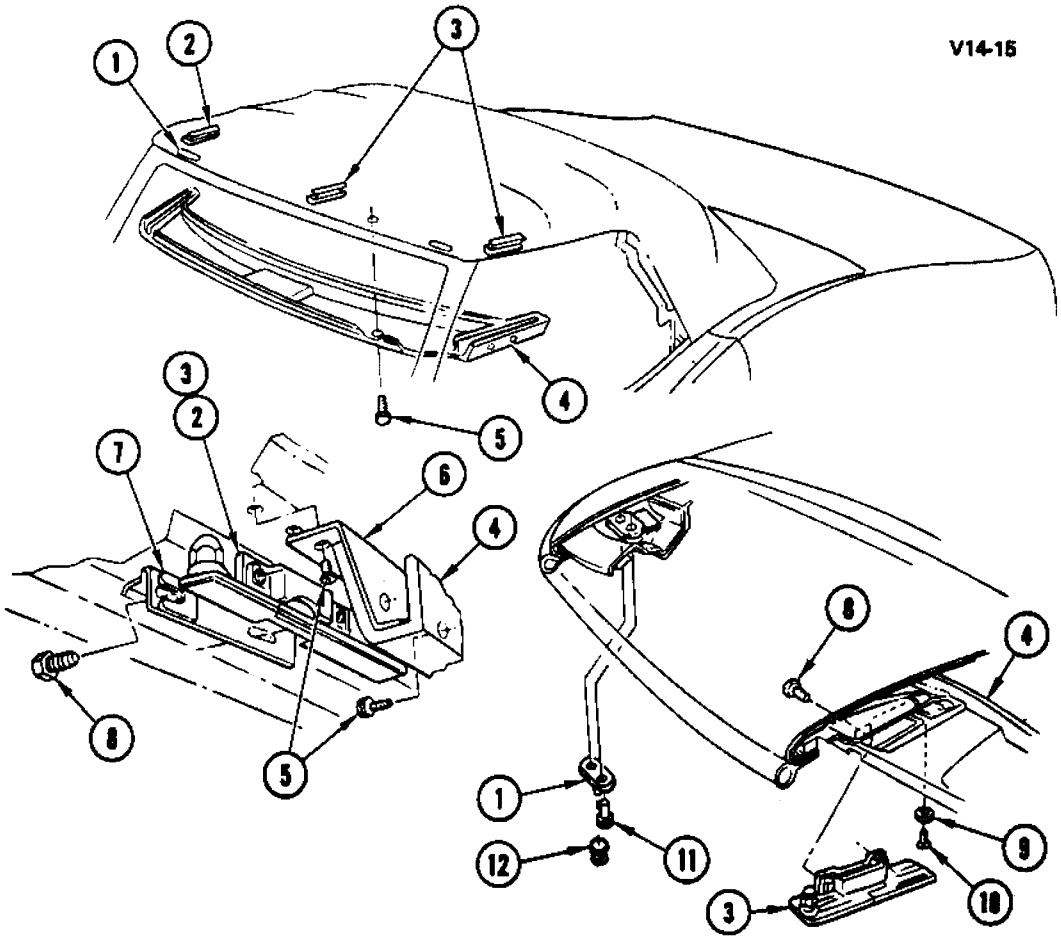

Copyright 2005 General Motors Corporation. All rights reserved.

ProQuest Automotive EPC

Make: CHEVROLET, Year: 68, Model: Corvette

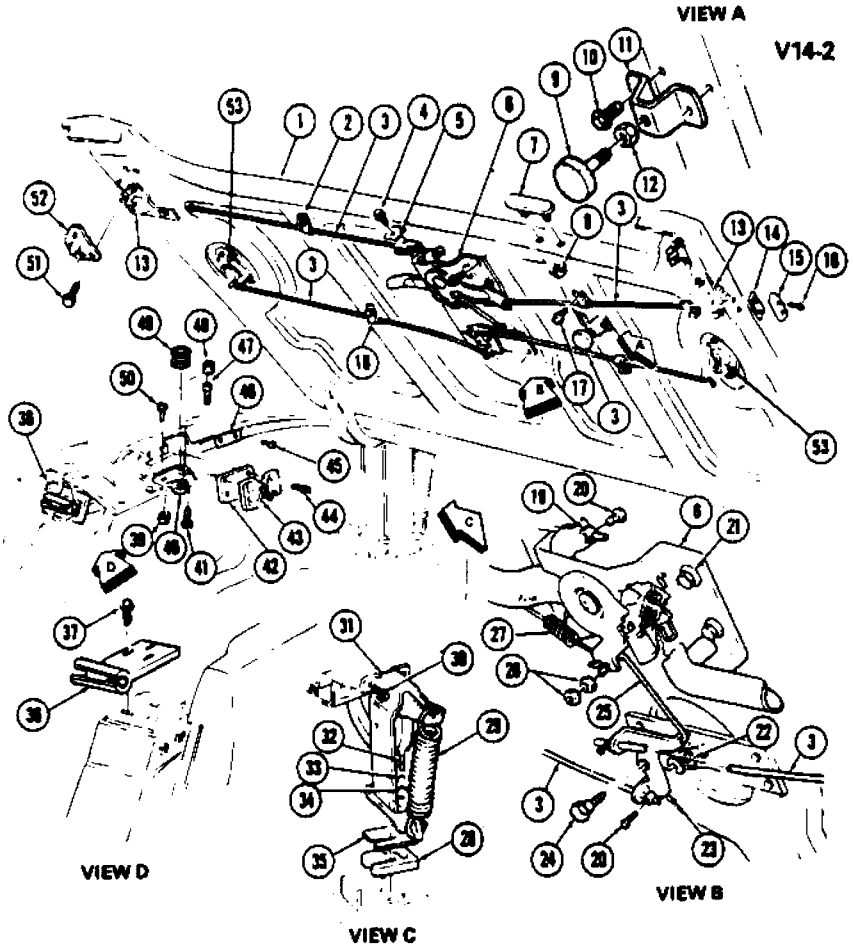

Copyright 2005 General Motors Corporation. All rights reserved.

ProQuest Automotive EPC

Make: CHEVROLET, Year: 68, Model: Corvette

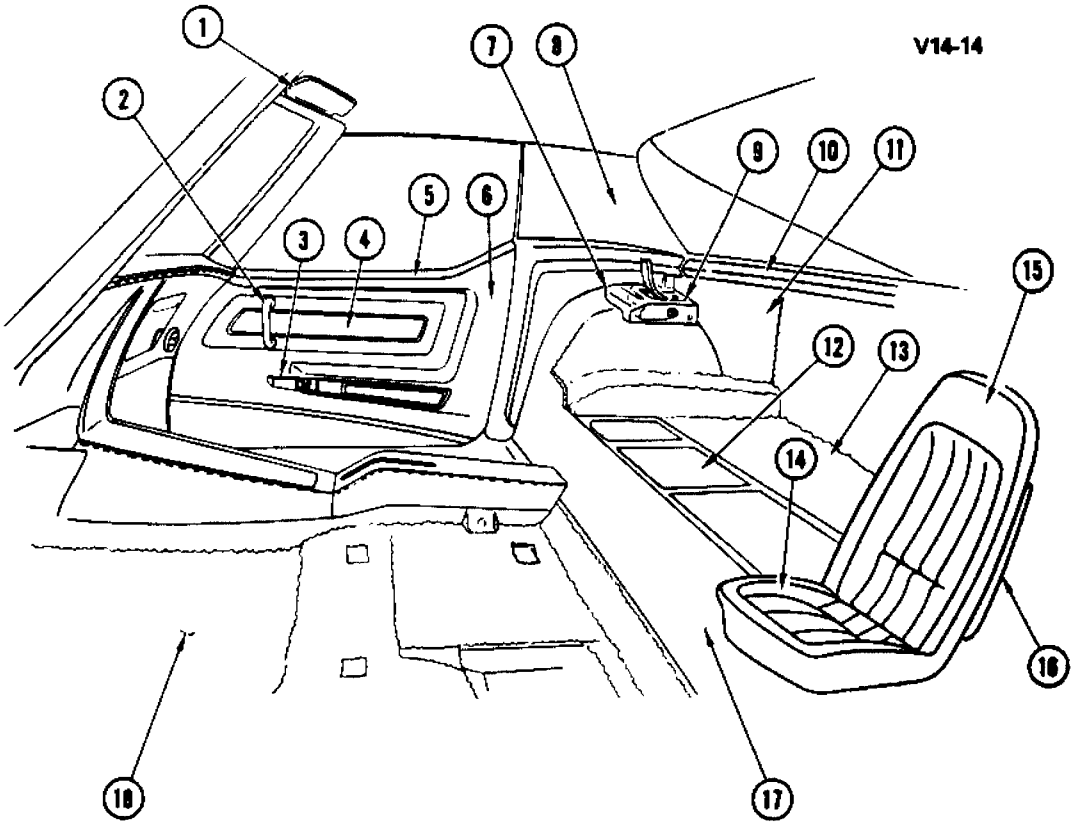

Copyright 2005 General Motors Corporation. All rights reserved.

ProQuest Automotive EPC